INSTALLATION GUIDE

PART SPECIFICATION		
NUMBER	MANUFACTURER CODE	ORDER NR
1	WAGO 2002-1201	9050023
2	WAGO 2002-1204	9050025
3	WAGO 2002-1291	9050043
4	WAGO 2004-1201	9050059
5	WAGO 2004-1204	9050060
6	WAGO 2004-1291	9050061
7	WAGO 2004-402	9050063
8	WAGO 284-621	9050075
9	WAGO 788-311	9050074
10	WAGO 249-116	9050062

Figure 1.
SAUNALIFE G6
CONNECTIONS DONE IN FACTORY

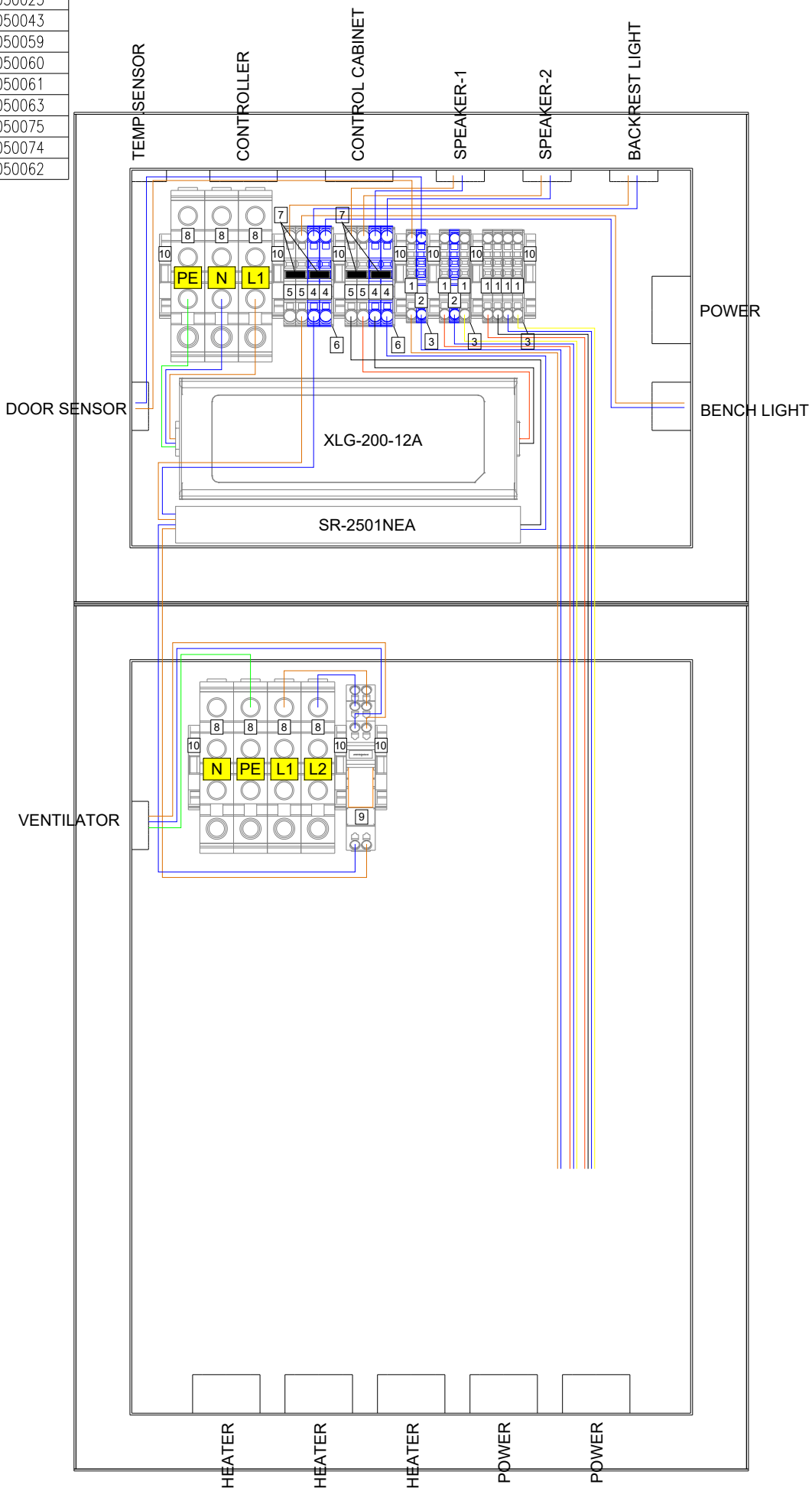

PART SPECIFICATION		
NUMBER	MANUFACTURER CODE	ORDER NR
1	WAGO 2002-1201	9050023
2	WAGO 2002-1204	9050025
3	WAGO 2002-1291	9050043
4	WAGO 2004-1201	9050059
5	WAGO 2004-1204	9050060
6	WAGO 2004-1291	9050061
7	WAGO 2004-402	9050063
8	WAGO 284-621	9050075
9	WAGO 788-311	9050074
10	WAGO 249-116	9050062

Figure 2.
SAUNALIFE G6
CONNECTIONS AFTER SAUNA INSTALLATION

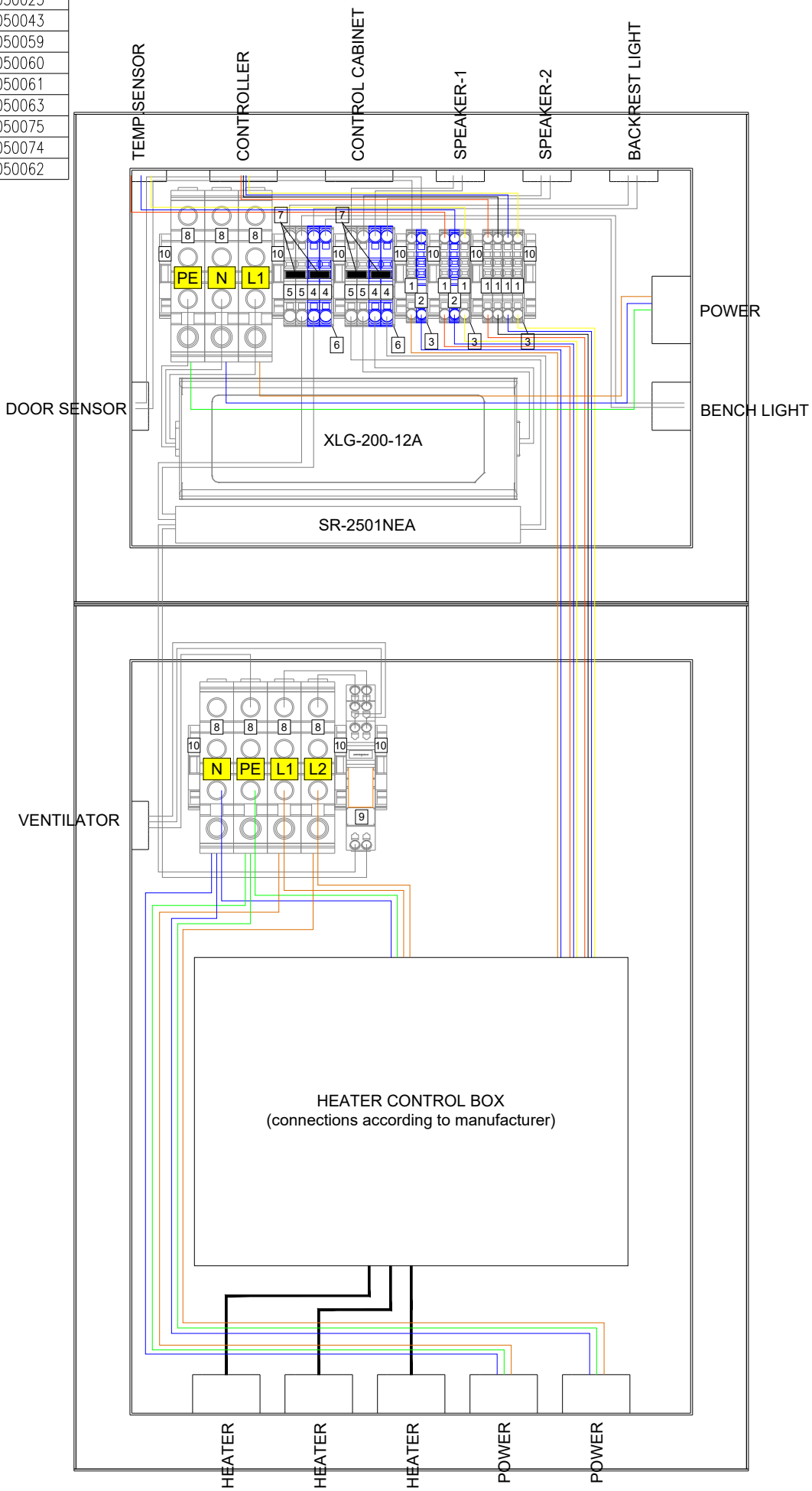

SAUNA LIFE SAUNA LIMITED LIFETIME WARRANTY
Sauna Life extends this Limited Warranty solely to the original retail consumer purchaser of any Sauna Life sauna purchased from one of its authorized resellers.

LIMITED LIFETIME SAUNA WARRANTY
Sauna Life warrants that the Sauna Life sauna shall be free from defects in workmanship under normal conditions of use and service for the lifetime of the sauna for residential applications after delivery to the original retail purchaser. This warranty is limited to making good any factory assembled component which in the judgment of Sauna Life is deemed defective in workmanship. The warranty does not cover normal material wear, natural weathering of the lumber, or installation or delivery of components and applies only to the original retail purchaser.

WARRANTY PERFORMANCE
For any warranty service, Sauna Life reserves the right to choose, at its option, repair of the problem or a replacement of the defective part. Sauna Life reserves the right to substitute a part or component of equivalent value, either new or factory reconditioned, and any such repair or replacement shall assume as its warranty only the remaining portion of the warranty on the original product. In the event Sauna Life chooses to repair any malfunction or defect covered by this warranty, a return authorization will be issued, and the component will be returned prepaid freight to Sauna Life for repair of the defect. Sauna Life will then ship the component back the original retail purchaser upon completion of the repair. Prior to any return, contact Sauna Life at: Sauna Life, 511 Glenn Avenue, Wheeling, Illinois 60090, telephone number: (800) 957-2862, for packaging and shipping instructions and a return authorization number. In addition, Sauna Life will require photographs of any defect and reserves the right to inspect or designate an agent to inspect any part that is claimed to be defective and covered by this warranty. Labor charges and related expenses for removal, installation, or replacement of the sauna or its components are not covered under this warranty. Normal wear and tear, cosmetic issues or changes to individual pieces of lumber due to natural aging and weathering are not covered. Sauna heaters and added components are not covered by this warranty.

ACTS INVALIDATING WARRANTY
This warranty is void if the Sauna Life sauna has been subject to alteration, misuse or abuse, commercial use, or if any repairs on the sauna are attempted by anyone other than an authorized representative of Sauna Life. Alteration shall include, but is not limited to, deviation from the original assembly instructions, component change, or the addition of any non-approved device or heating system, which contributes to a component or unit failure, or unsafe operating system. Use of the sauna in an application for which it is not designed will void this warranty. This includes, but is not limited to, damage caused by operation above safe sauna operating temperatures, damage caused by added components, damage to the sauna's surface caused by harsh chemicals, damage caused by movement of the product, and damage caused by acts of God.

DISCLAIMERS
Except as expressly provided above, Sauna Life makes no other representation or warranty, express or implied, either in fact or operation of law, statute, or otherwise, and Sauna Life specifically disclaims any and all implied or statutory warranties, including warranties or merchantability and of fitness for a particular purpose. Sauna Life shall not be liable for loss of use of the Sauna Life sauna or other incidental or consequential costs, expenses, or damage, which may include but are not limited to, the removal of or reinstallation of a wall, deck or other fixture, water leakage, costs of shipping or packaging, applicable taxes, or the payment of any costs or expenses of disassembly, removal, or reinstallation of the product or any part. Your rights may vary from state to state. Under no circumstances shall Sauna Life or its representatives be held liable for injury to any person or damage to any property, however arising, even if caused by the Sauna Life Sauna or its representatives' negligence. No distributor, salesperson, dealer, retailer, or other representative of Sauna Life has the authority to alter or change these warranties either orally or in writing.

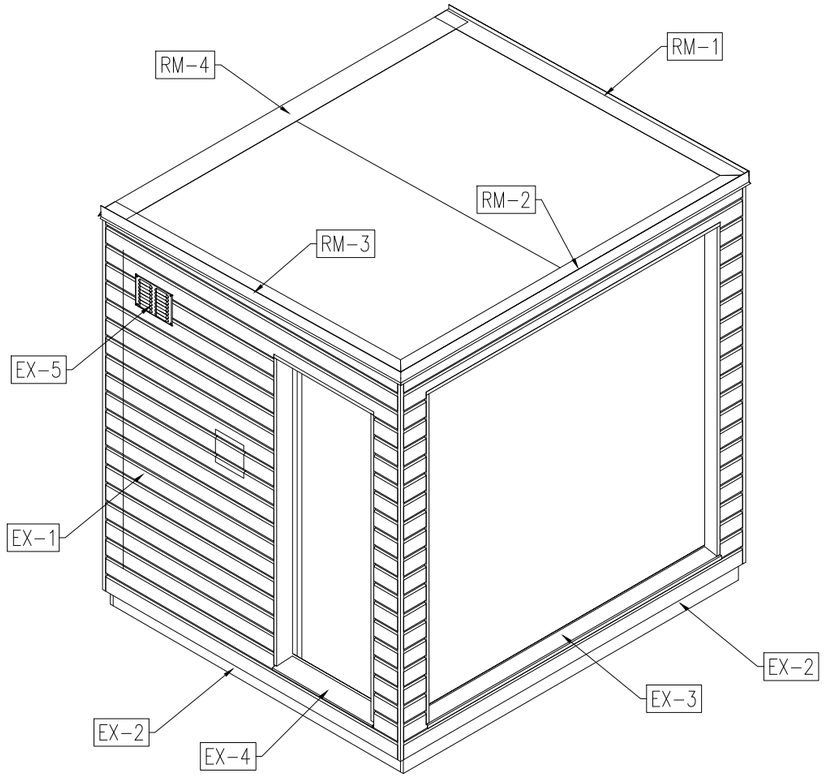

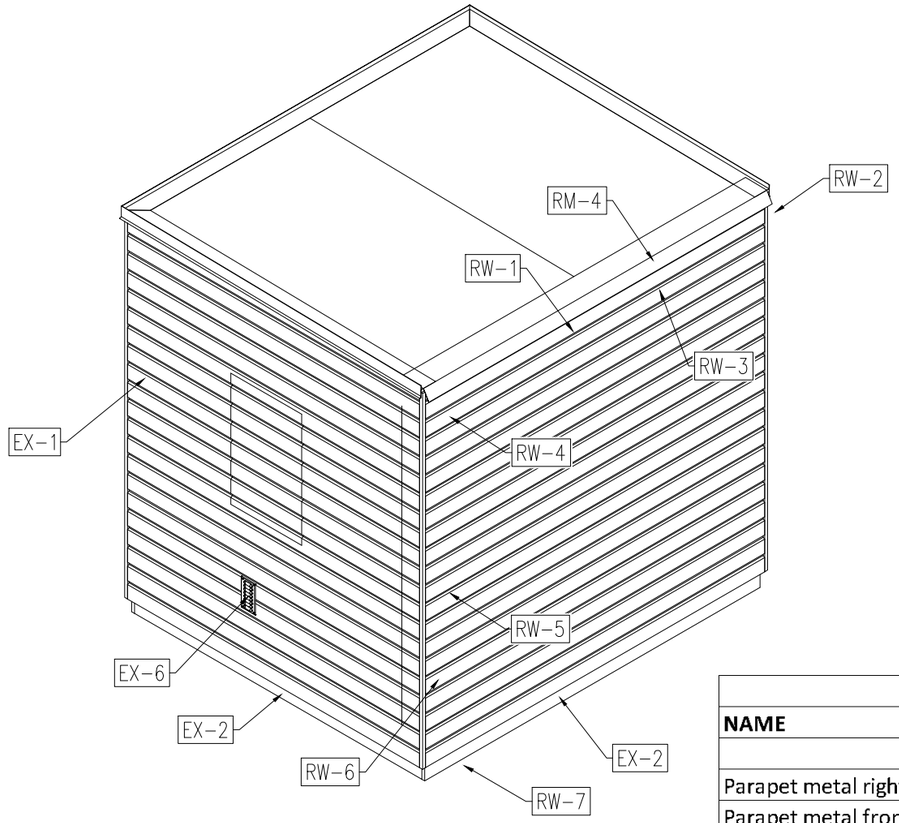

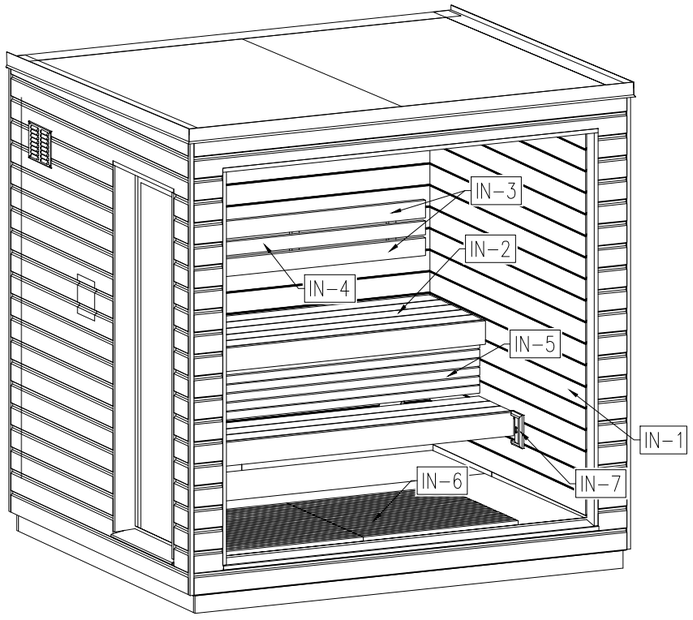

Classic		
NAME	**SYMBOL**	**ORDER NR.**
Roof		
Parapet metal right	RM-1	4030031
Parapet metal front	RM-2	4030024
Parapet metal left	RM-3	4030032
Roof drip metal	RM-4	4030021
Rainwater gutter	RW-1	4030033
Rainwater gutter end cap	RW-2	4030004
Rainwater gutter bracket	RW-3	4030003
Rainwater drop outlet	RW-4	4030002
Rainwater down pipe	RW-5	4030005
Rainwater down pipe bracket	RW-6	4030006
Rainwater outlet	RW-7	4030007
Extenal		
Cladding board (1 pc 2,4m)	EX-1	7060019
Base board (1 pc 2,8m)	EX-2	7060004
Window metal	EX-3	4030028
Door metal	EX-4	4030022
Air outlet cover 260x190mm	EX-5	2020004
Air inlet cover 140x190mm	EX-6	2020011
Internal		
Cladding board STS3 15x120mm (1 pc 2,7m)	IN-1	7050005
Bench board 28x120mm (1 pc 2,7m)	IN-2	7070053
Backrest board 28x90mm (1 pc 2,4m)	IN-3	7070053
Backrest board 28x65mm (1 pc 2,4m)	IN-4	7070037
Skirt board 28x42mm (1 pc 2,4m)	IN-5	7070031
Floor grid board 28x28mm (1 pc 2,4m)	IN-6	7070025
Air inlet cover	IN-7	2020008

saunalife

PROJECT G6		DRAWING Spare Parts	
ADDRESS - -		CONTRACT -	SCALE - / FORMAT A3
		DESIGNER	DATE 26.04.2024
CODE -		CHECK	PAGE 1/1